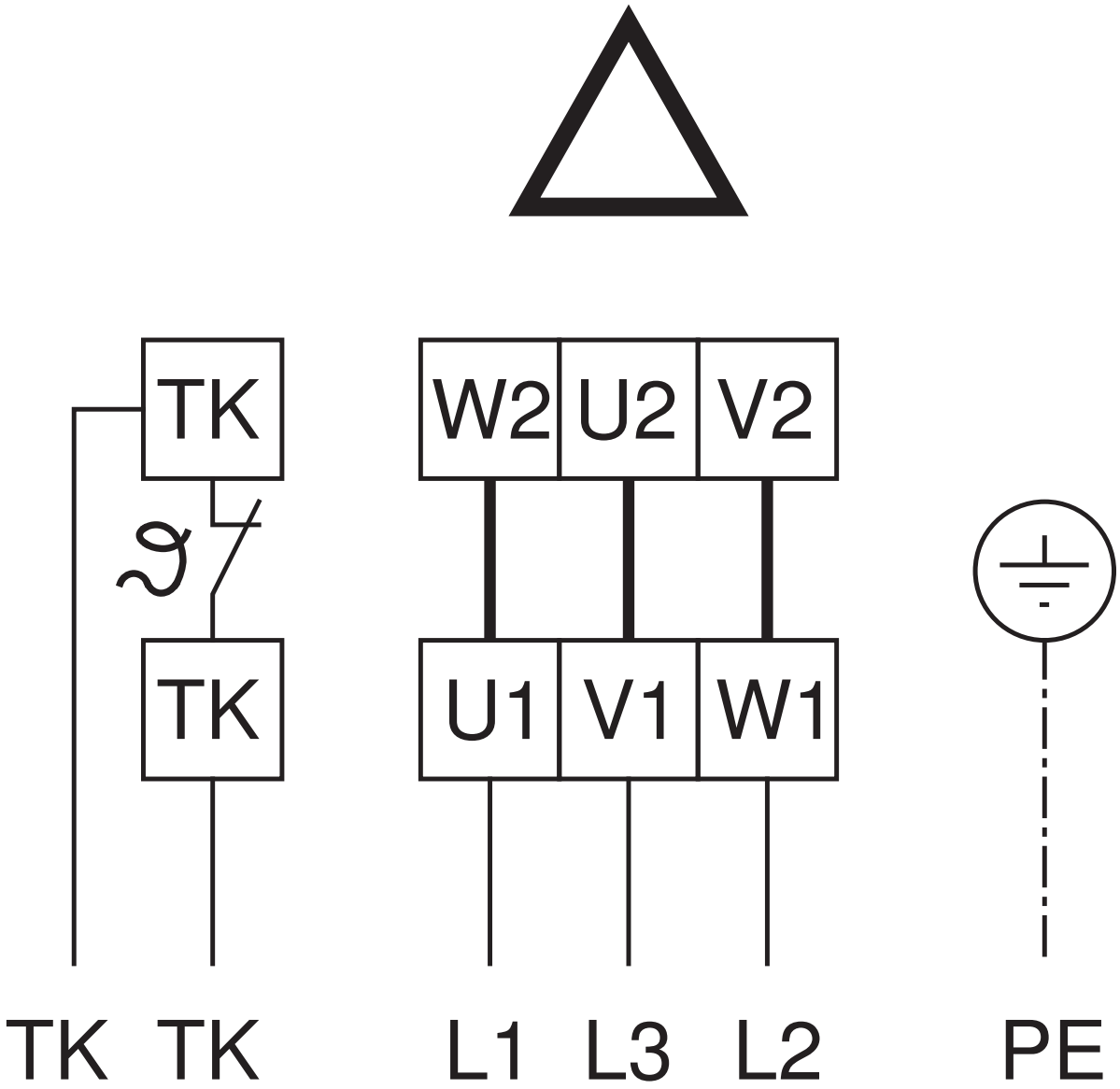

85494 001 SS-1234