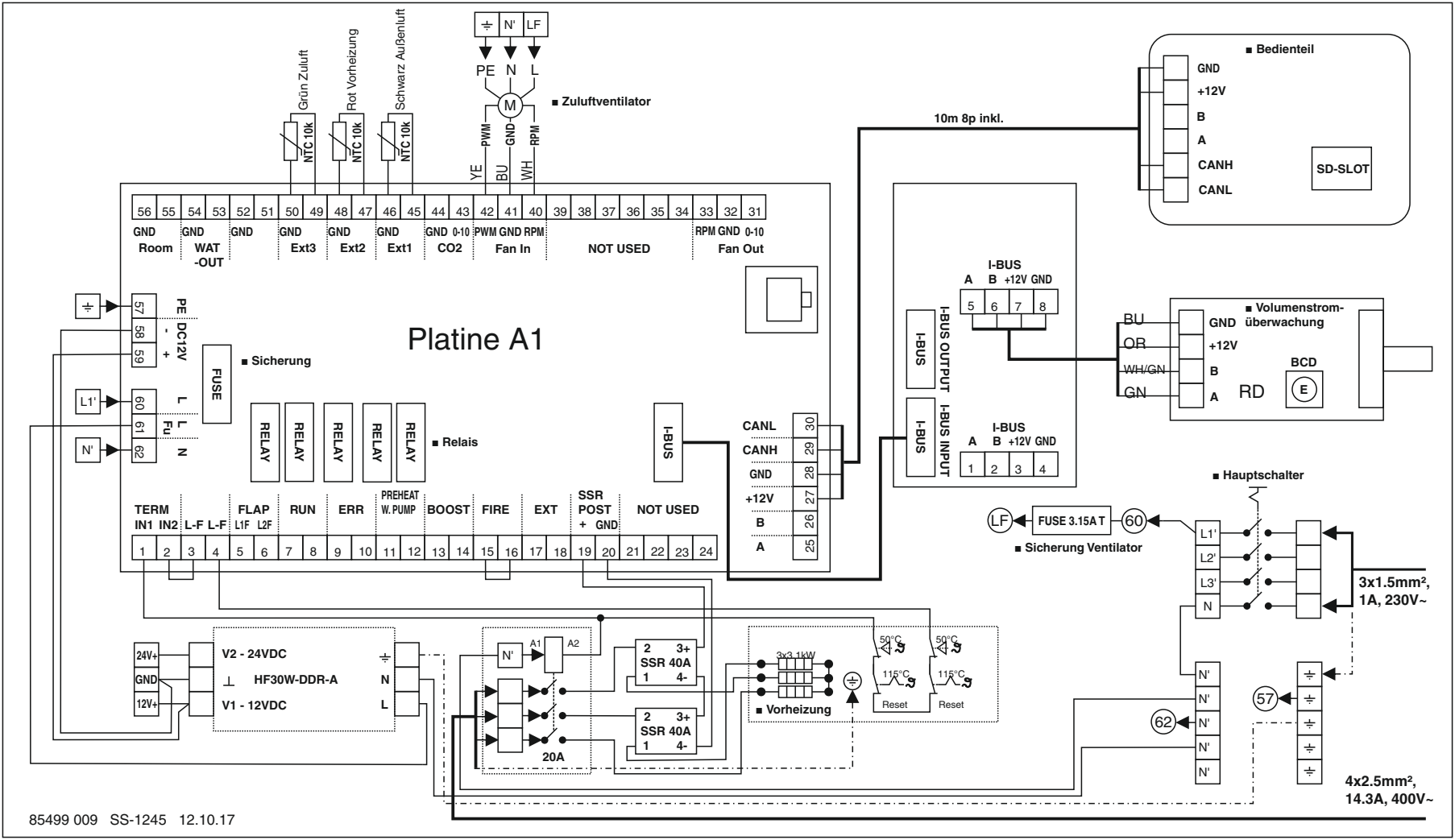

85499 009 SS-1245 12.10.17

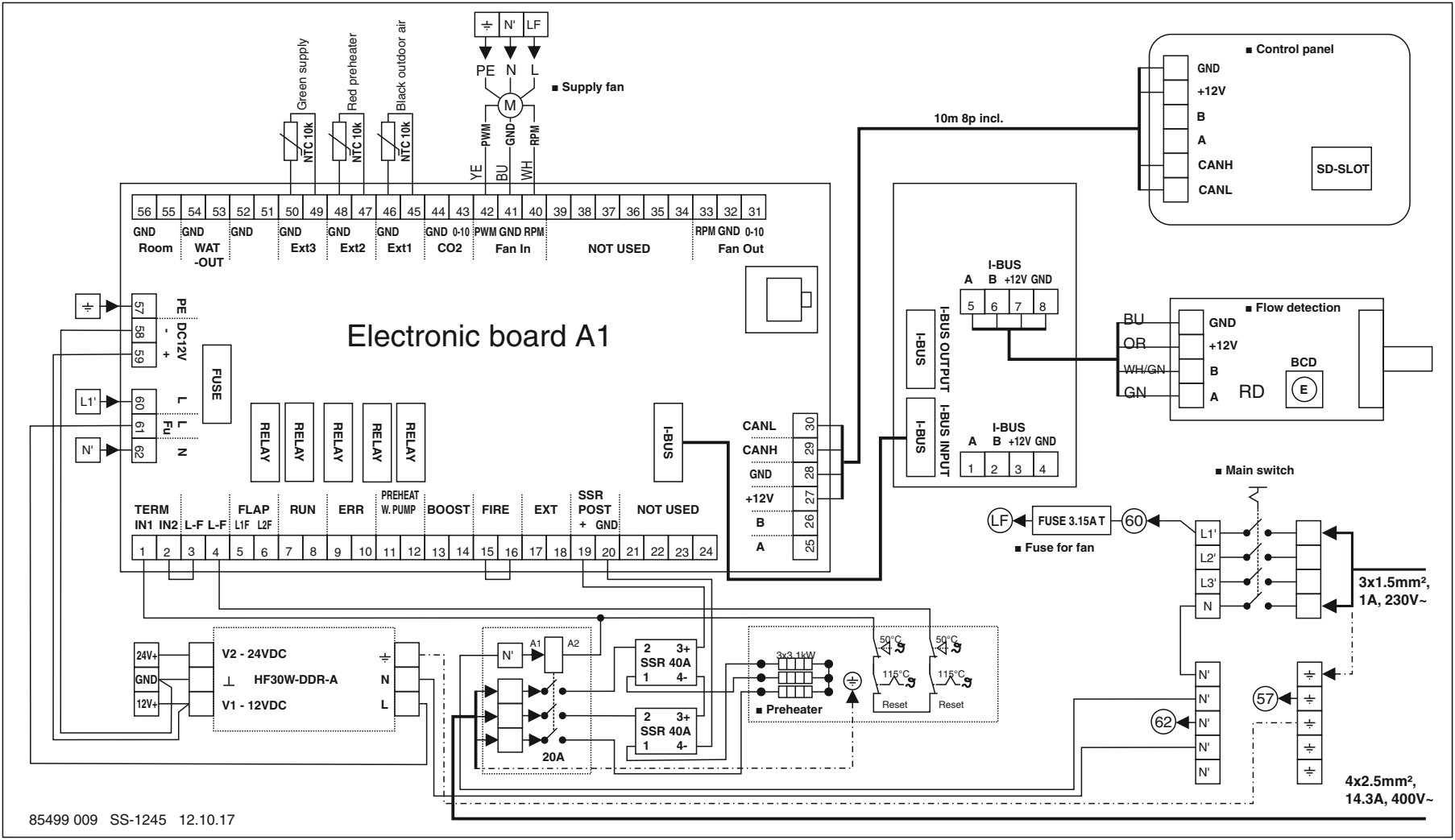
Green supply
Red preheater
Black outdoor air
NTC 10k
NTC 10k
NTC 10k
PE N L
N' LF
■ Supply fan
M
PWM GND RPM
YE BU WH
10m 8p incl.
■ Control panel
GND
+12V
B
A
CANH
CANL
SD-SLOT
56 55 54 53 52 51 50 49 48 47 46 45 44 43 42 41 40 39 38 37 36 35 34 33 32 31
GND Room
GND WAT -OUT
GND
GND Ext3
GND Ext2
GND Ext1
GND 0-10 CO2
PWM GND RPM Fan In
NOT USED
RPM GND 0-10 Fan Out
Electronic board A1
PE
DC12V - +
L1'
L L Fu
N'
N
57 58 59 60 61 62
FUSE
RELAY
RELAY
RELAY
RELAY
RELAY
I-BUS
CANL 30
CANH 29
GND 28
+12V 27
B 26
A 25
I-BUS
A B +12V GND
5 6 7 8
I-BUS OUTPUT
I-BUS
I-BUS INPUT
I-BUS
A B +12V GND
1 2 3 4
■ Flow detection
BU
OR
WH/GN
GN
GND
+12V
B
A
RD
BCD
E
TERM IN1 IN2
L-F L-F
FLAP L1F L2F
RUN
ERR
PREHEAT W. PUMP
BOOST
FIRE
EXT
SSR POST + GND
NOT USED
1 2 3 4 5 6 7 8 9 10 11 12 13 14 15 16 17 18 19 20 21 22 23 24
■ Main switch
LF
FUSE 3.15A T
60
■ Fuse for fan
L1'
L2'
L3'
N
3x1.5mm², 1A, 230V~
24V+
GND
12V+
V2 - 24VDC
HF30W-DDR-A
V1 - 12VDC
N
L
N'
A1
A2
20A
2 3+ SSR 40A 1 4-
2 3+ SSR 40A 1 4-
3x3 1kW
■ Preheater
50°C
115°C
Reset
50°C
115°C
Reset
N'
N'
N'
N'
N'
62
57
4x2.5mm², 14.3A, 400V~
85499 009 SS-1245 12.10.17

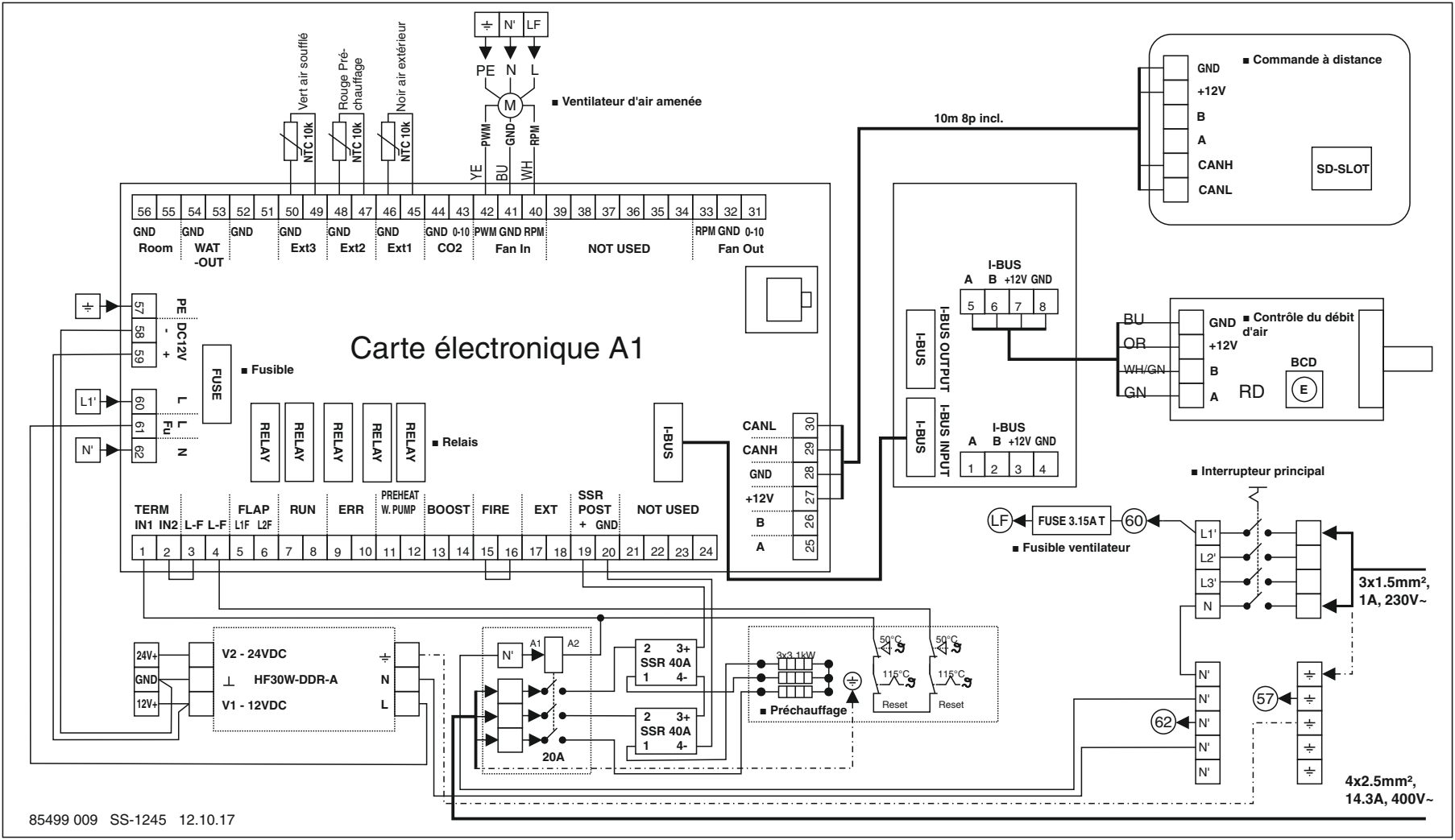

85499 009 SS-1245 12.10.17