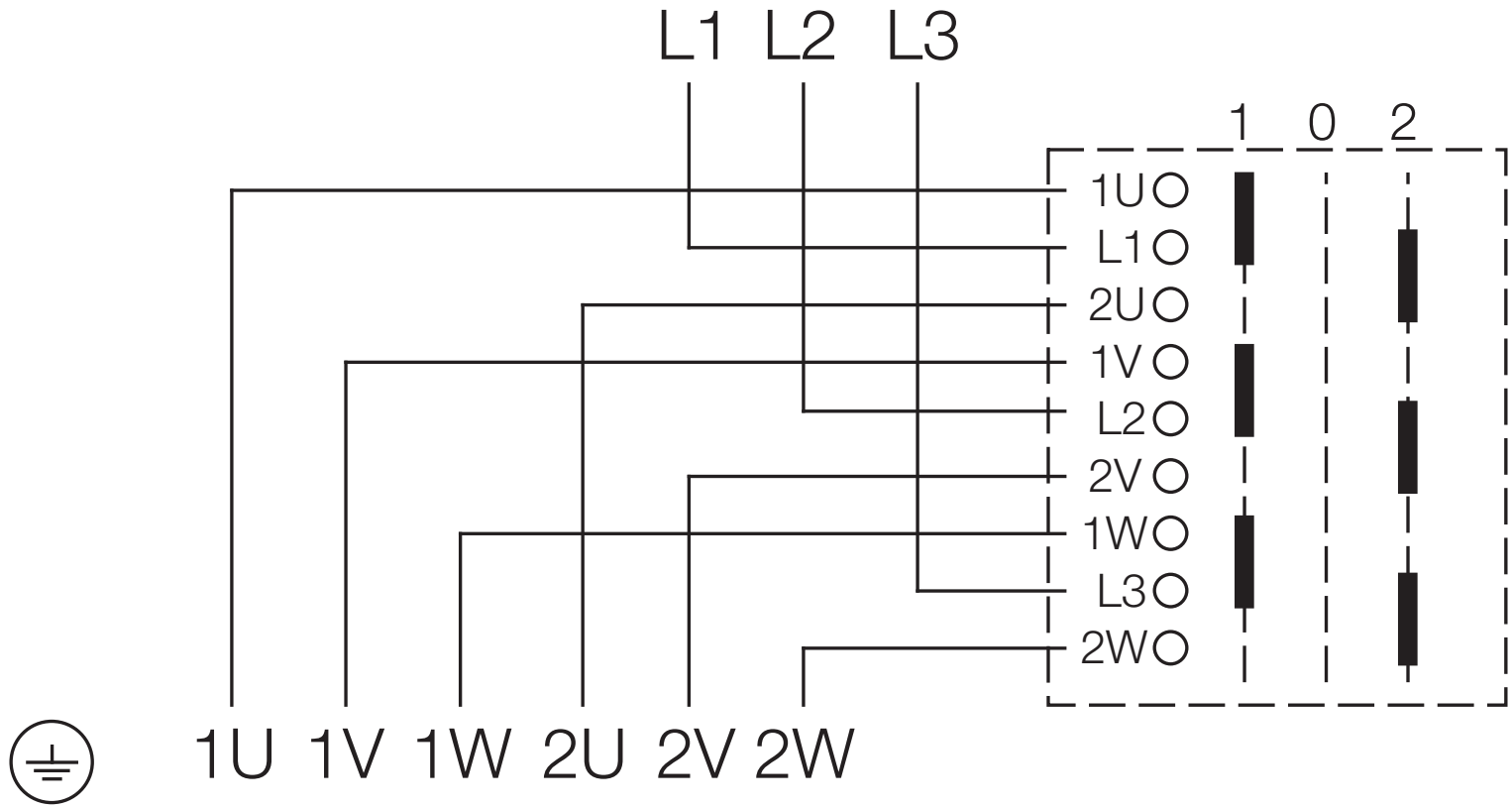

32376 SS-345