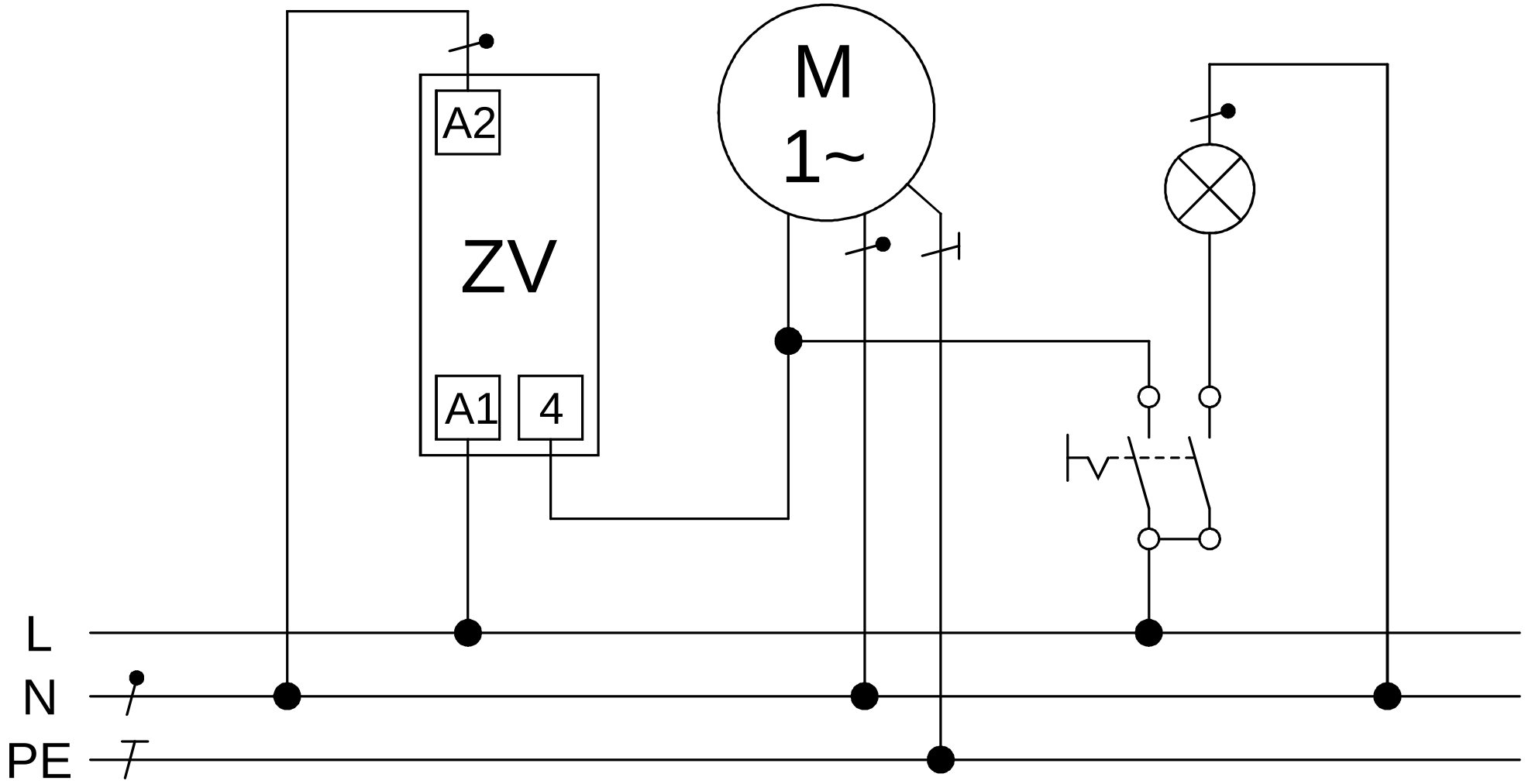

85499 357 SS-1527