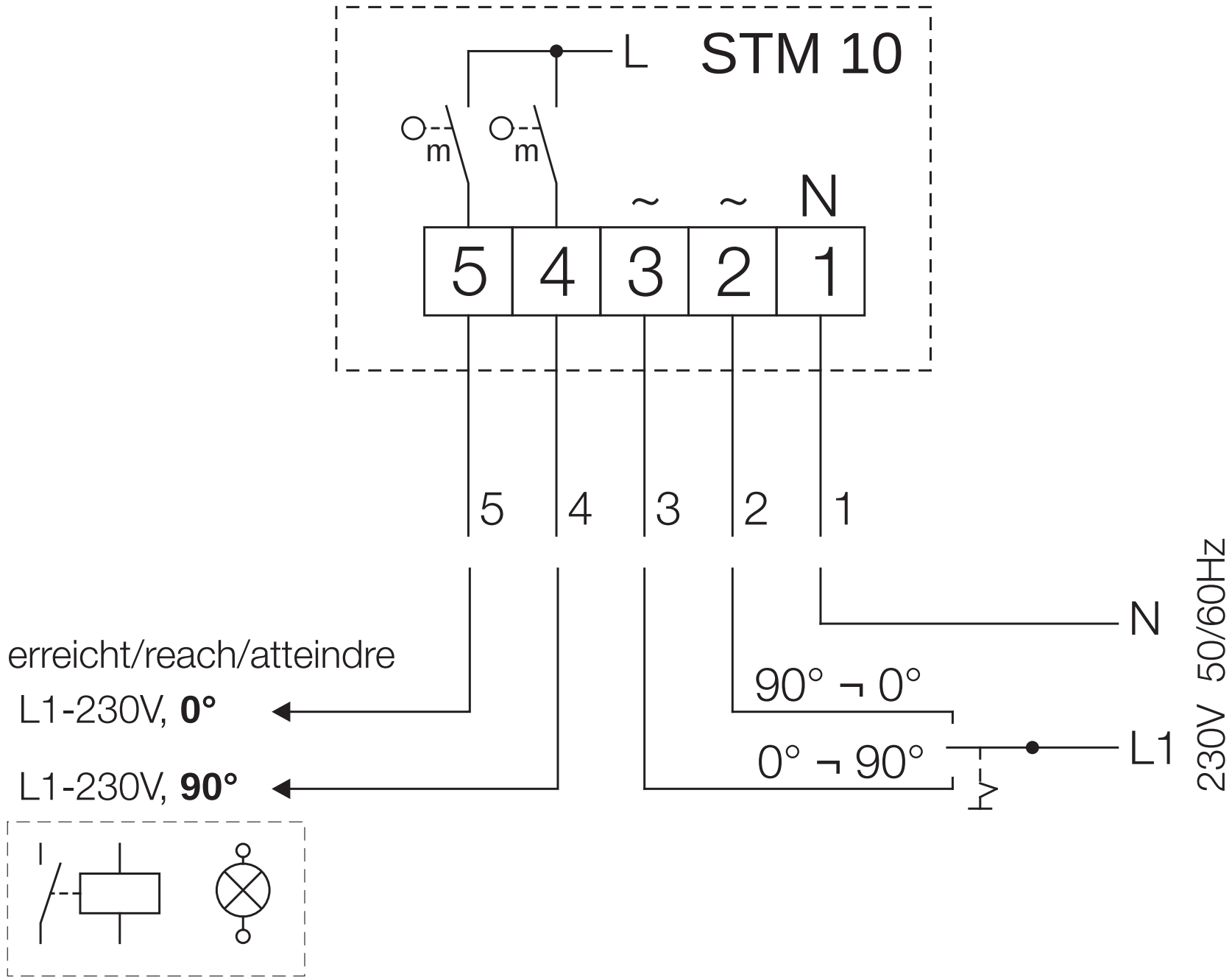
STM 10
L
m
m
~
~
N
5
4
3
2
1
5
4
3
2
1
N
90° ¬ 0°
0° ¬ 90°
L1
230V 50/60Hz
erreicht/reach/atteindre
L1-230V, **0°**
L1-230V, **90°**

92712 SS-705