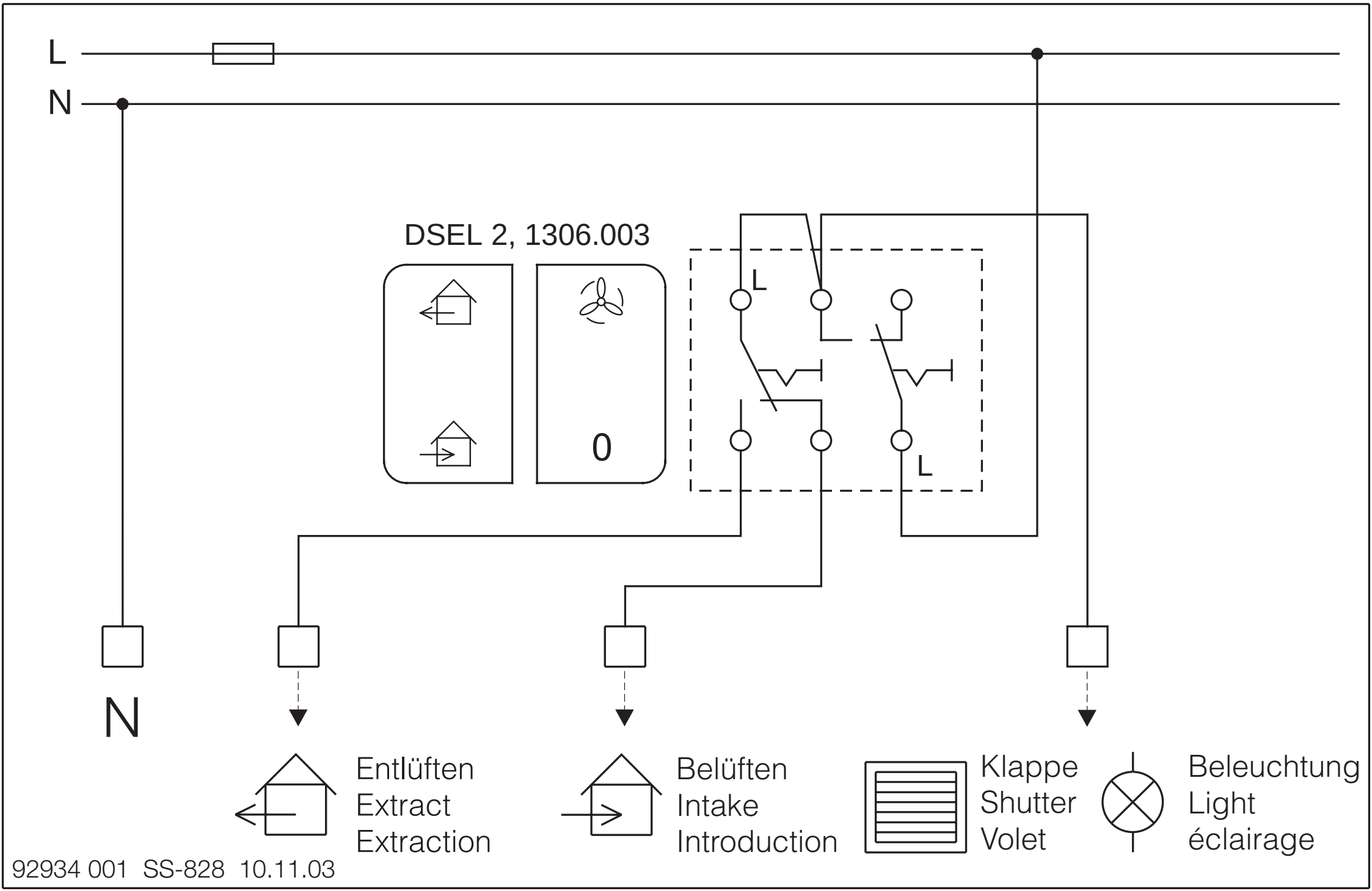
L
N
DSEL 2, 1306.003
0
L
L
N
Entlüften
Extract
Extraction
Belüften
Intake
Introduction
Klappe
Shutter
Volet
Beleuchtung
Light
éclairage
92934 001 SS-828 10.11.03