AIR1-KR KW XVP

Cold water cooling register external

For demand-oriented temperature control (cooling) of supply air. Casing in robust panel construction, insulated on all sides with 50 mm mineral wool for the minimisation of heat losses. External corrosion-resistant coating of casing. Large inspection openings on both sides of unit for easy access and optimised cleaning and maintenance. Stainless steel condensate tray with condensate drain outlets. Recommended accessories: Ball siphon AIR1-KS D (Ref. no. 07170)

Detailed calculations / technical information: www.AIR1Select.com

Technical data

Type	Ref. no.	Water content	Connection flow / return (1)	Weight (without liquid)	Condensate connection
AIR1-KR KW XVP 850 L / R	40476 / 40477	1.7 l	G 3/4	50.0 kg	17.5 mm
AIR1-KR KW XVP 1250 L / R	40485 / 40486	2.7 l	G 1	60.0 kg	17.5 mm
AIR1-KR KW XVP 1800 L / R	40492 / 40493	2.7 l	G 1	69.0 kg	17.5 mm
AIR1-KR KW XVP 2500 L / R	40499 / 40500	4.4 l	G 1 1/4	72.0 kg	17.5 mm
AIR1-KR KW XVP 3500 L / R	40510 / 40511	6.3 l	G 1 1/2	87.0 kg	17.5 mm

Dimensions AIR1-KR KW XVP L

AIR1-KR KW XVP 850-1800 L

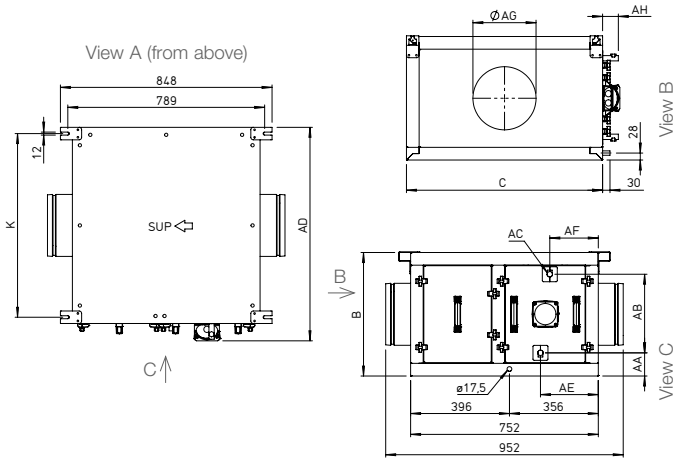

AIR1-KR KW XVP 2500-3500 L

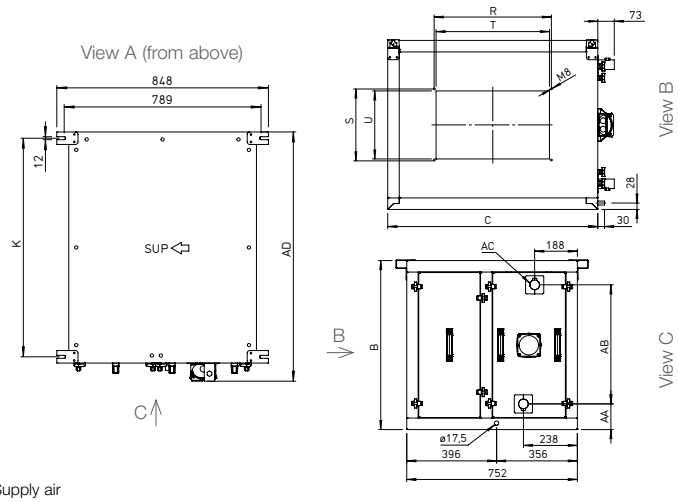

Dimensions in mm

SUP: Supply air

Dimensions AIR1-KR KW XVP R

AIR1-KR KW XVP 850-1800 R

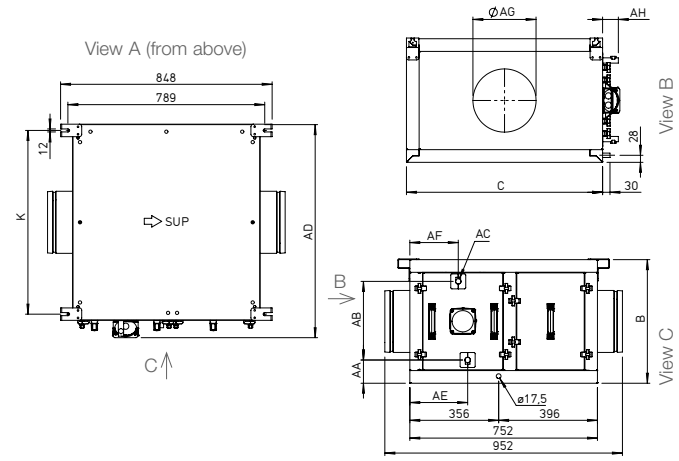

AIR1-KR KW XVP 2500-3500 R

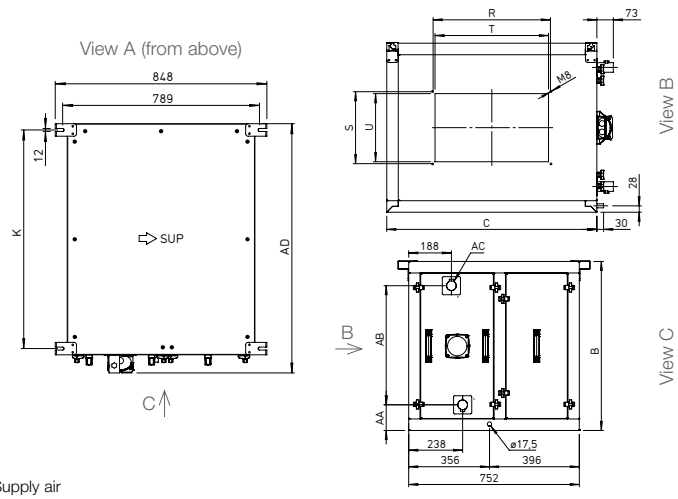

Dimensions in mm

SUP: Supply air

Dimensions

Type	Ref. no.	B	C	K	R	S	T	U	AA	AB	AC (1)	AD	AE	AF	AG	AH
AIR1-KR KW XVP 850 L / R	40476 / 40477	495	786	736	-	-	-	-	93	315	G 3/4	855	232	194	250	63
AIR1-KR KW XVP 1250 L / R	40485 / 40486	625	756	706	-	-	-	-	98	433	G 1	825	232	193	315	68
AIR1-KR KW XVP 1800 L / R	40492 / 40493	575	886	836	-	-	-	-	99	383	G 1	955	242	184	355	68
AIR1-KR KW XVP 2500 L / R	40499 / 40500	745	926	876	520	320	500	300	113	525	G 1 1/4	999	-	-	-	-
AIR1-KR KW XVP 3500 L / R	40510 / 40511	795	1122	1072	720	420	700	400	110	575	G 1 1/2	1195	-	-	-	-

(1) External thread