M1/100

Dimensions M1/100

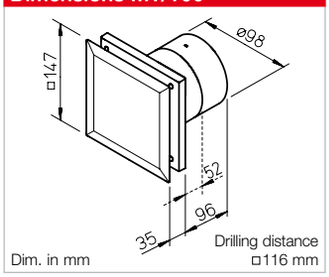

Performance curve M1/100

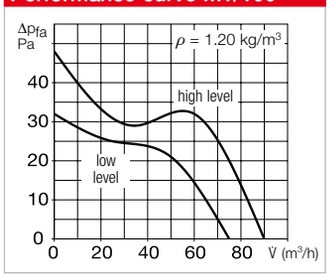

Premium class small room fans. The design and performance of the MiniVent M1/100 set new standards in the field of compact fans.

With its multi-award-winning design, the MiniVent M1/100 blends in harmoniously in all environments. The enclosed, well-designed facade completely prevents viewing of the fan clogging zone.

All M1/100 models come with 2 performance levels and tight-closing backdraught shutters as standard.

The noise level is extremely low thanks to Helios ultraSilence technology.

Available with turn-off delay mode and interval mode or barrier-free automatic functions, such as the presence detector or humidity control function. The humidity control function responds to the rate of humidity increase with intelligent electronics and effectively prevents mould formation.

Universally applicable for the ventilation of bathrooms, WCs and other small rooms.

Features

- ☐ Extremely low power consumption of just 5 Watts at V̇ = 75 m³/h.
- ☐ Ultra quiet thanks to ultraSilence technology; just 25 dB(A) at V̇ = 75 m³/h.
- ☐ Pressure performance: 60 m³/h volume flow at 31 Pa resistance. 90 m³/h free blowing, ΔP max. 45 Pa.
- ☐ In case of restricted space conditions, the M1/100 guide wheel can be easily removed. This reduces the installation depth from 96 to just 52 mm.
- ☐ Compact dimensions for universal flush-mounted installation in walls, shafts and ceilings with NW 100.
- ☐ All parts are made of high-quality plastic, colour: white.
- ☐ Ball bearings and motor are designed for continuous loads, constant output and lifelong functional reliability.
- ☐ Motor with thermal overload protection, maintenance-free and radio interference-free.
- ☐ Applicable in wet room zone 1 according to DIN VDE 0100-701.
- ☐ Electrical supply line can be surface or flush-mounted.
- ☐ Practical quick installation due to screwless connection terminals.

Type	M1/100	M1/100 N/C	M1/100 F	M1/100 P
Ref. no.	06171	06172	06175	06174
Version	Standard model with two speed levels	Like M1/100, with codeable turn-off delay & interval model[1]	Like M1/100, with humidity control function[1][4]	Like M1/100, with presence detector[1]
Turn-off delay time, min. optional at high or low level	—	6, 10, 15, 21 adjustable	6, 12, 18, 24 adjustable[3]	6
Interval mode, hours optional at high or low level	—	0, 8, 12, 24 adjustable	—	—
Start-up delay approx. sec.	—	0, 45, 90, 120	0 or 45[3]	—
Inner shutter, removable	Yes	Yes	Yes	Yes
Flow rate free blowing m³/h	90 / 75	90 / 75	90 / 75	90 / 75
Impeller Ø mm	92	92	92	92
Speed min⁻¹	2650 / 2250	2650 / 2250	2650 / 2250	2650 / 2250
Voltage / Frequency 50 Hz	230 V	230 V	230 V	230 V
Power consumption W	9 / 5	9 / 5	9 / 5	9 / 5
Rated current A	0.06 / 0.04	0.06 / 0.04	0.06 / 0.04	0.06 / 0.04
Sound pressure level dB(A) at 3 m[2]	30 / 25	30 / 25	30 / 25	30 / 25
Wiring diagram no.	915	917	919	918
Electrical supply line NYM-O in mm²	3 x 1.5	4 x 1.5	4 x 1.5	3 x 1.5
Protection class II, protection category	IP45	IP45	IP45	IP45
Max. air flow temperature	+40 °C	+40 °C	+40 °C	+40 °C
Weight approx. kg	0.80	0.80	0.80	0.80

[1] All electronic functions optionally adjustable at high or low performance level.
[2] Free field conditions.
[3] For manual operation.
[4] Limit value 60, 70, 80, 90 % adjustable.

Beautiful and clean
Air flows into the M1 from all sides. The front facade is completely closed and elegantly conceals the bothersome clogging zone in conventional compact fans.
The M1 blends in harmoniously in all environments. The smooth-surfaced front facade always remains easy to maintain and clean.

Wall mounting kit
WES 100 Ref. no. 00717
Two telescoping plastic ducts serve as the wall/feed duct; for flush-mounted installation.
External wall connection possible in two ways:
a) Frame with three blades as an automatic shutter.
b) Use of the frame with fixed grille. All parts made of high-quality plastic.

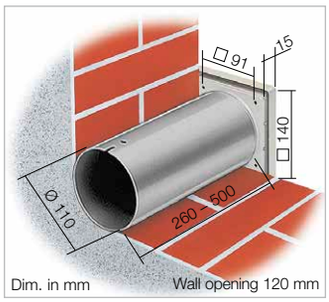

Intelligent humidity control function
The humidity control function of type M1/100 F automatically activates the fan depending on the humidity increase rate. The turn-off delay time depends on the room humidity reduction. In case of constantly high humidity, the fan will automatically switch to interval mode.

Telescopic wall sleeve
TWH 100 Ref. no. 06352
Like WES, but without shutter and grille.

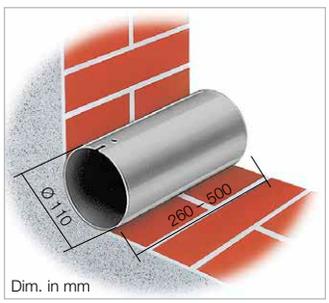

Rapid connection
The electrical connection is enormously facilitated by a generously dimensioned, circumferential cable storage space on the back of the unit, the full rotatability of the casing and screwless terminals.
Long-life ball bearings for 40.000 operating hours allow installation in any position, even directly in the ceiling.

Operating and speed switch 0-1-2 for standard model
MVB Ref. no. 06091
With functions On/Off, low and high speed.

Load capacity	3 A (ind.)
Voltage	230 V, 1~, 50/60 Hz
Protection category	IP 30
Installation	in standard flush-mounted box
Dimensions mm	W 80 x H 80 x D 15
Weight approx.	0.1 kg

Mounting panel
MBR 90/160/300 Ref. no. 00281
Made of high-quality, impact-resistant plastic, colour: alpine white. Ideal for use in renovations.
All M1/100 models can be easily installed in existing, rectangular shaft openings with the mounting panel.
The panel can be fully painted or wallpapered in order to hide it.

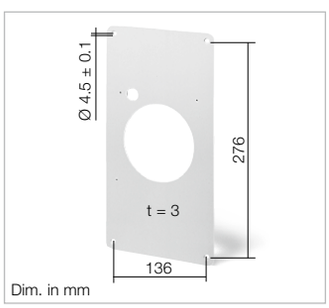

Flexible installation depth
The removeable guide wheel reduces the installation depth from 96 to 52 mm. Installation possible with or without backdraught shutters.

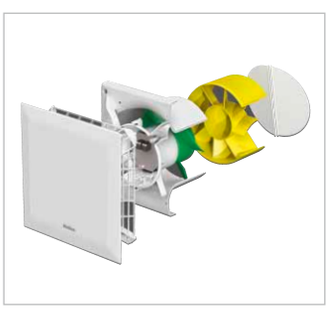

Mounting flange
MF 100 Ref. no. 06188
For installation depth reduction in case of thin walls, narrow shafts and short bends. Also suitable for the installation of a drawcord switch (accessories). If required, multiple MF 100 can be connected to each other.

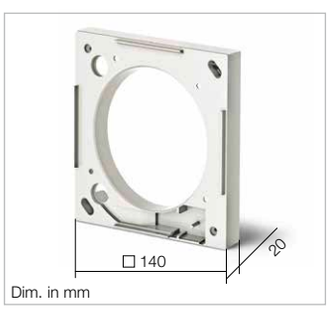

Applicable in wet room zone 1
MiniVent M1/100 complies with jet water protection IPX5, insulation protection class II and may be used in zone 1 according to DIN VDE 0100-701.

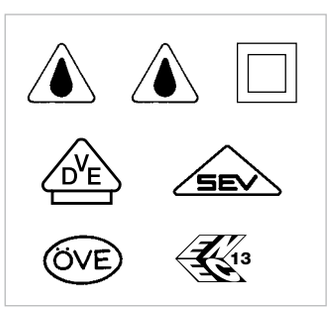

Accessory details **Page**

Flexible ventilation ducts, roof outlets and ventilation grilles	561 ff.
Intake air elements	586 ff.